50.17.00.00.178 - M / 202602

Monteringsanvisning Assembly Instructions Asennusohjeet Montageanleitung Monteringsvejledning

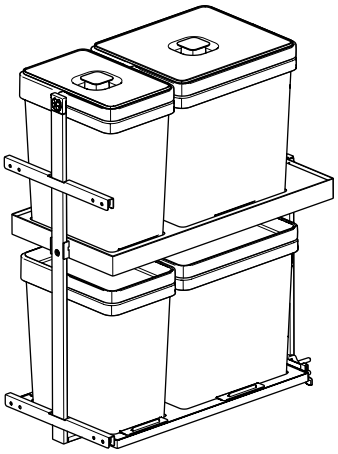

Sort & Recycle Flip

8816



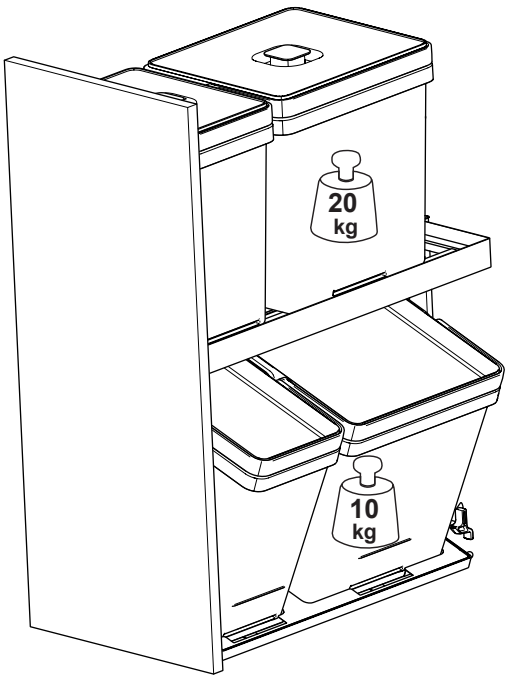

Left side

Sort & Recycle

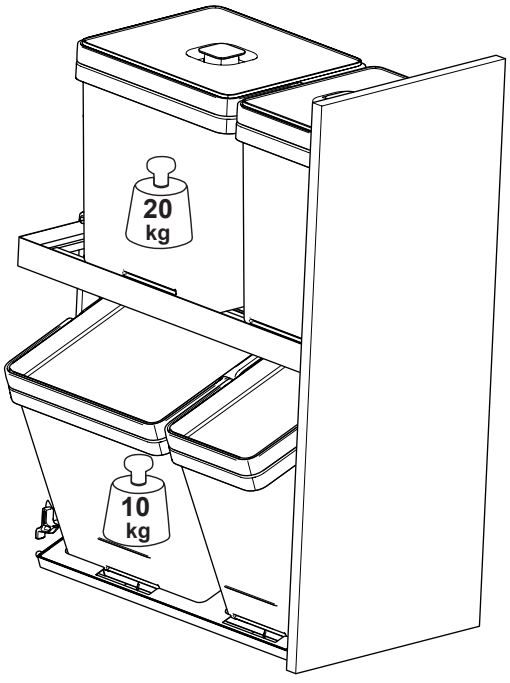

Right side

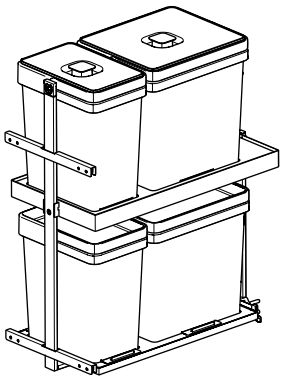

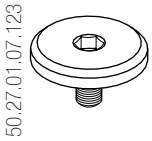

4x



4x



3x



10x



2x



1x

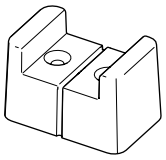
1x

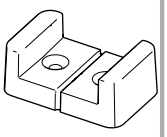
1x


2x

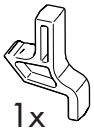
1x

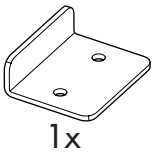
1x

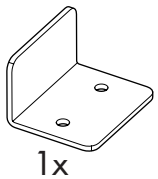
1x

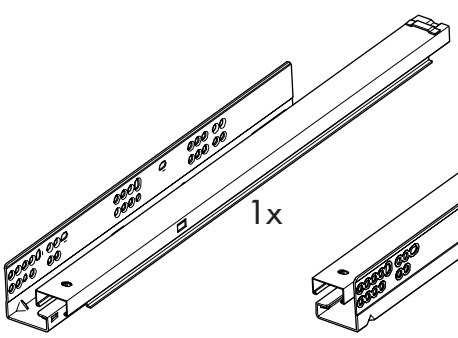
1x

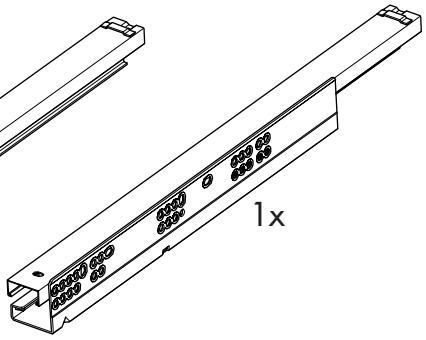
1x

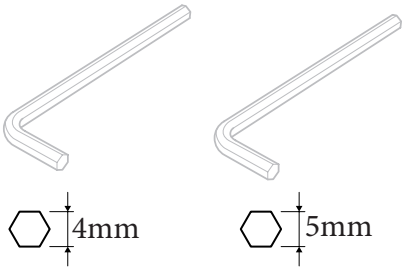

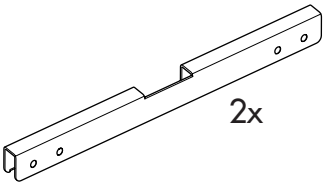
2x

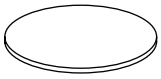
1x

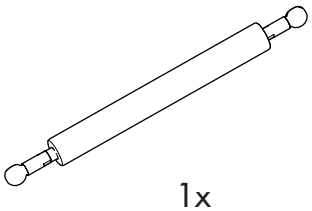
1x

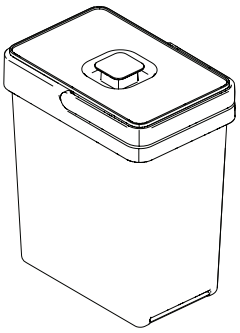
1x

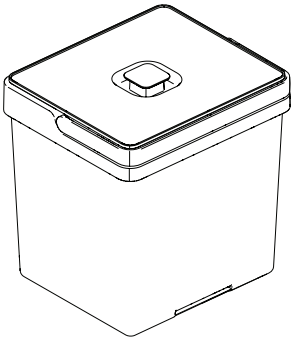
1x

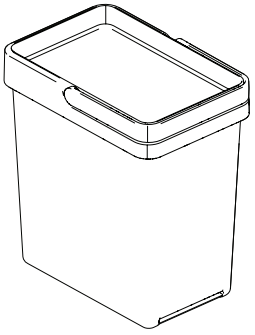
1x

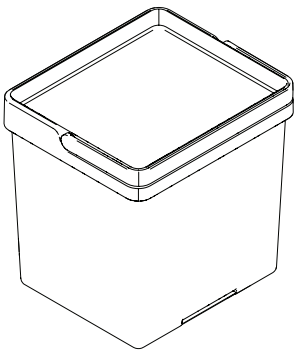
1x

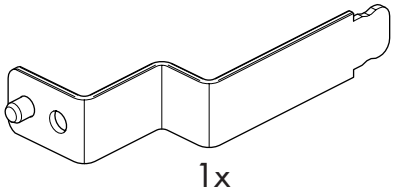
1x

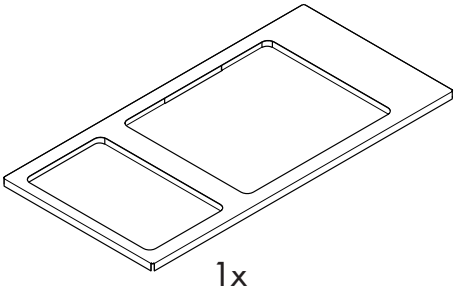
1x

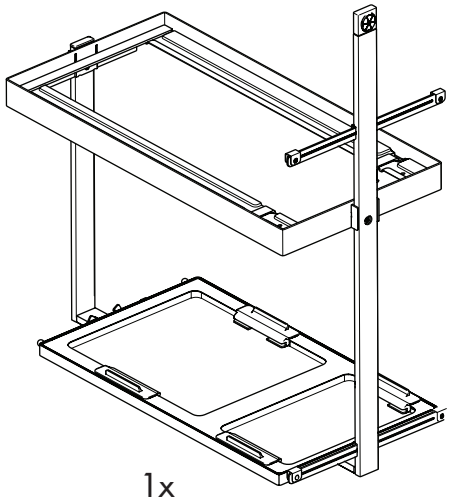
1x

1

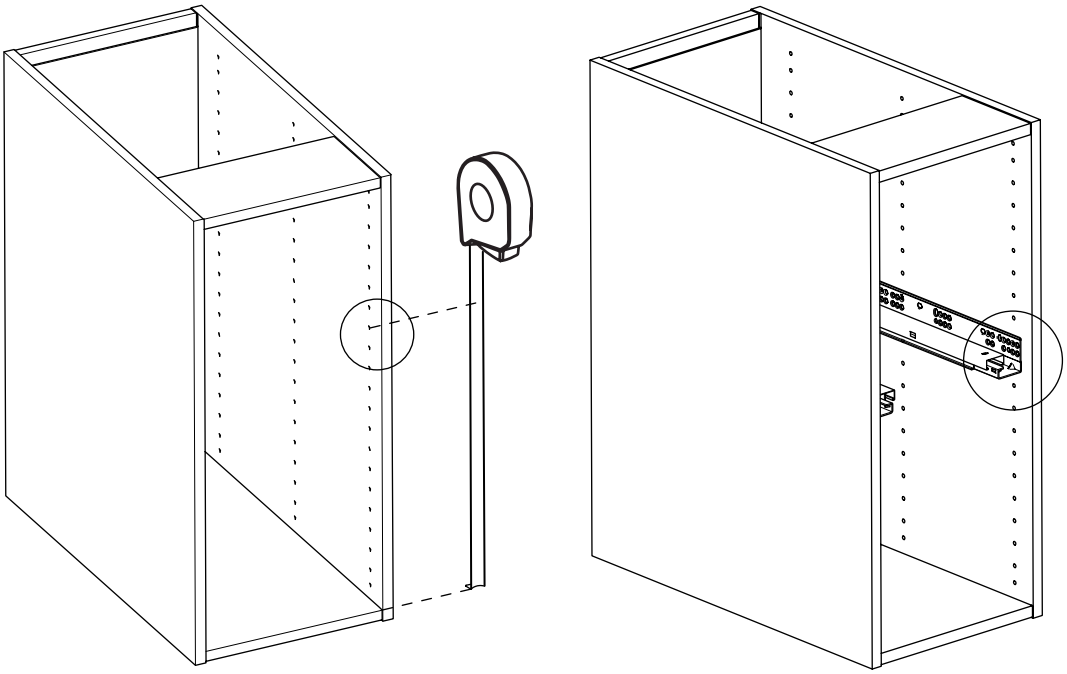

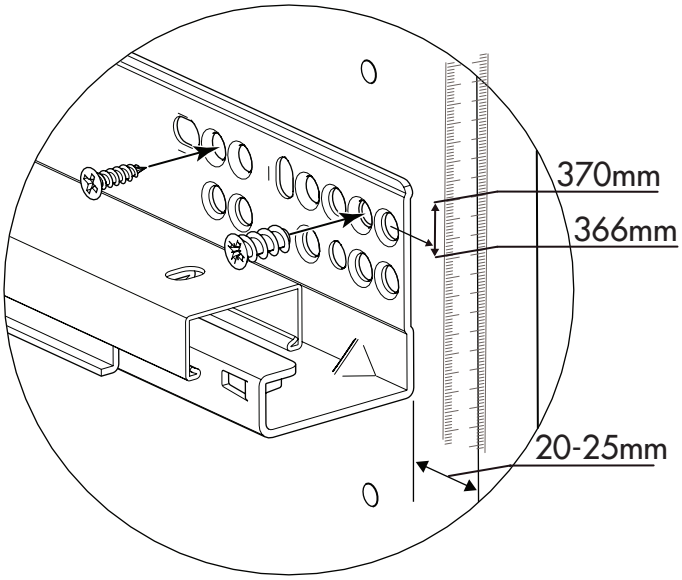
370mm
366mm
20-25mm

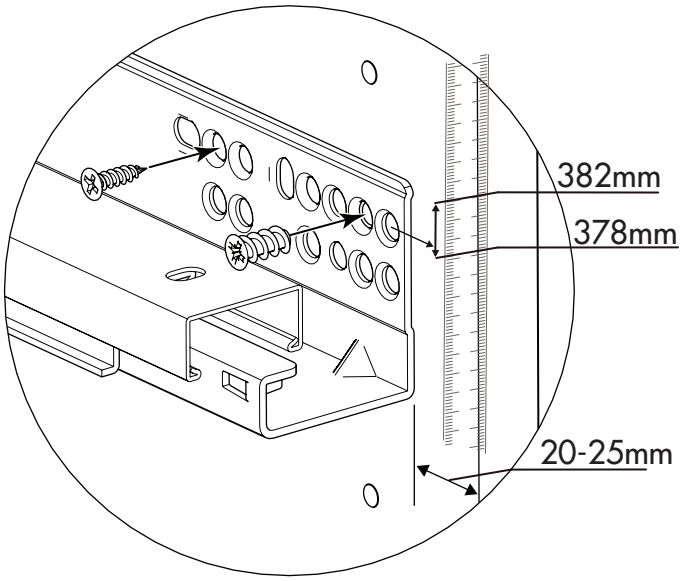
382mm
378mm
20-25mm

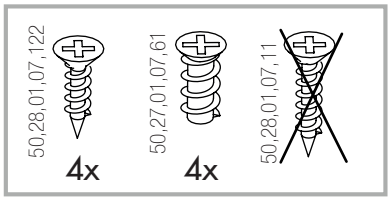
50,28,01,07,122
4x
50,27,01,07,61
4x
50,28,01,07,11

2

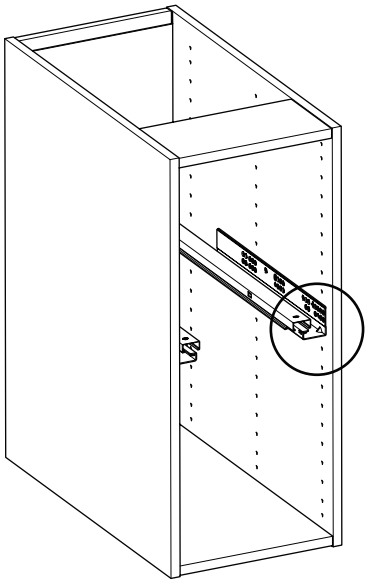

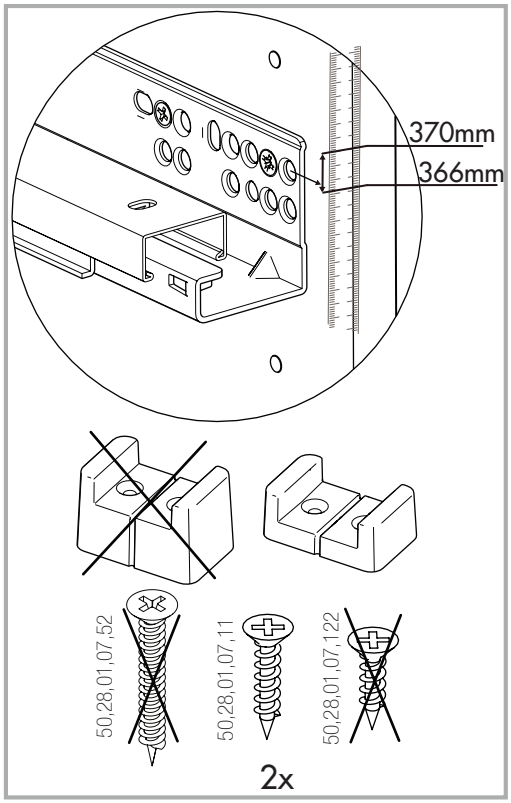
370mm
366mm
50,28,01,07,52
50,28,01,07,11
50,28,01,07,122
2x

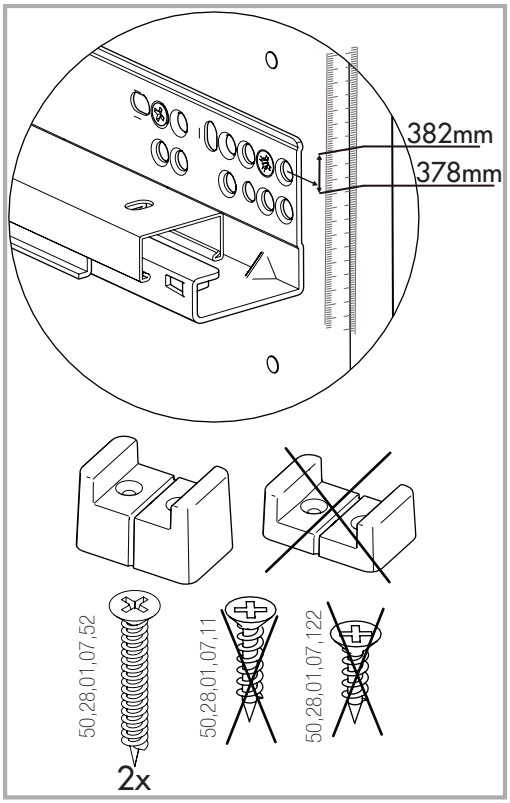
382mm
378mm
50,28,01,07,52
50,28,01,07,11
50,28,01,07,122
2x

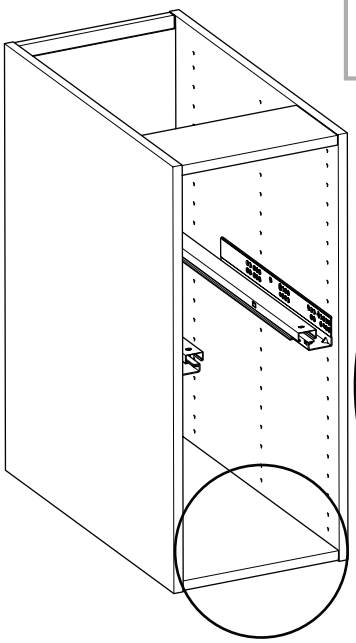

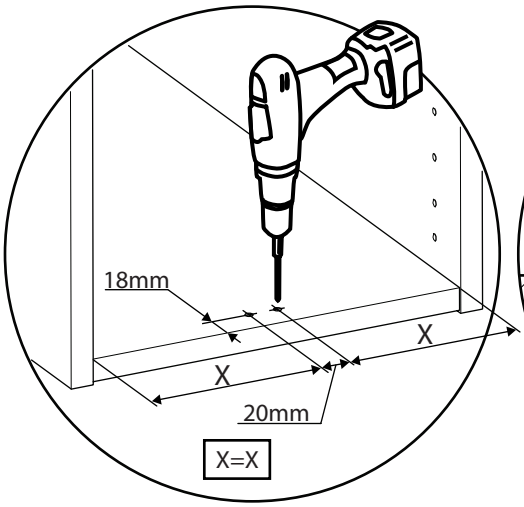
18mm
X
X
20mm
X=X

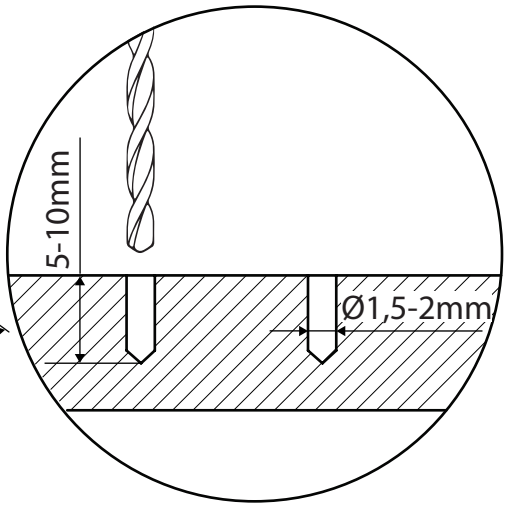
5-10mm
Ø1,5-2mm

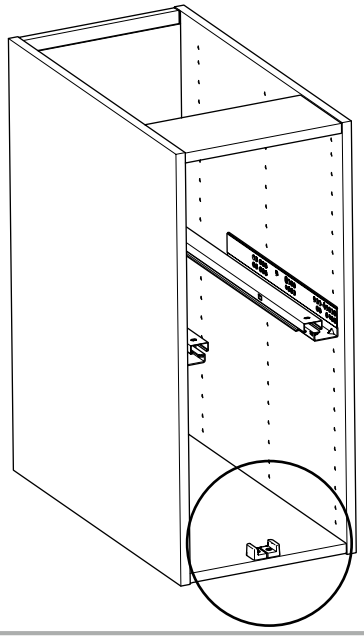

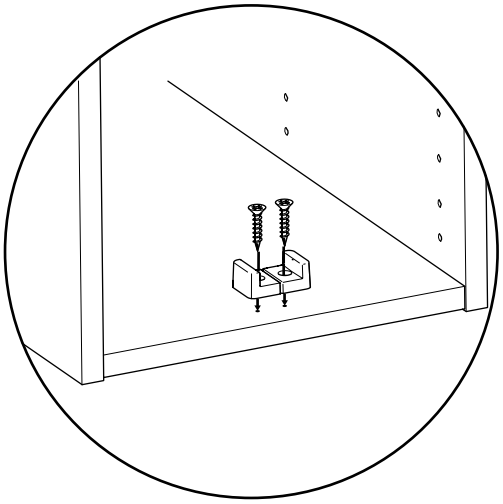

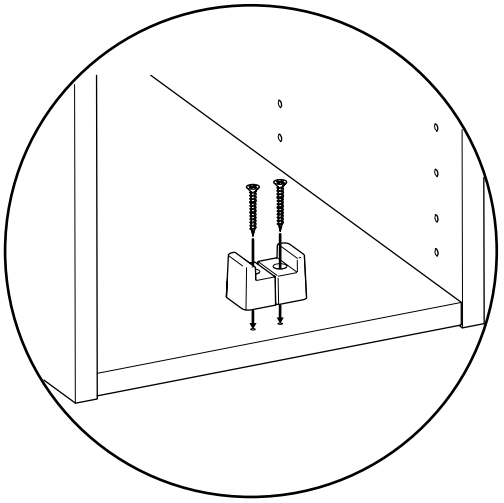

3

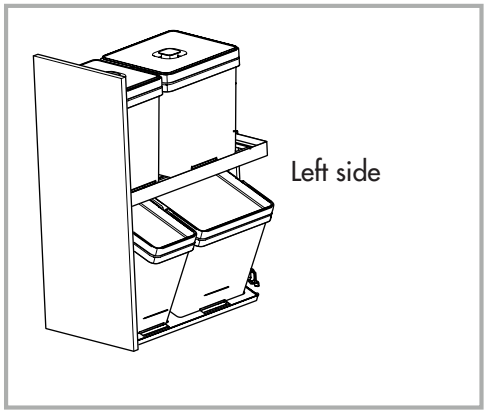
Left side

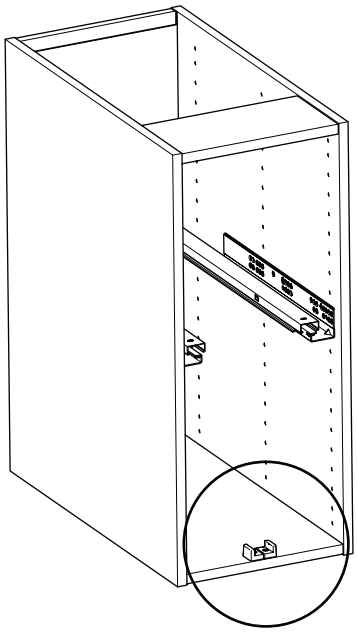

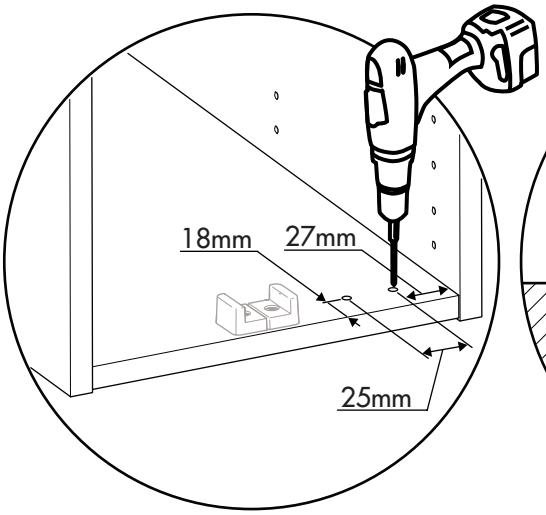
18mm
27mm
25mm

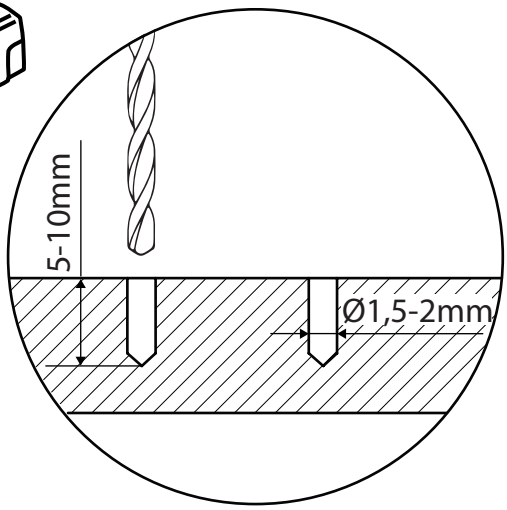
5-10mm
Ø1,5-2mm

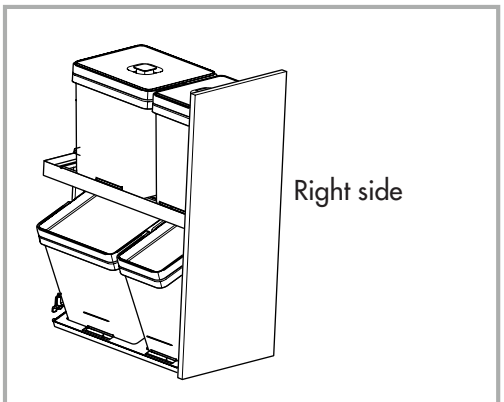
Right side

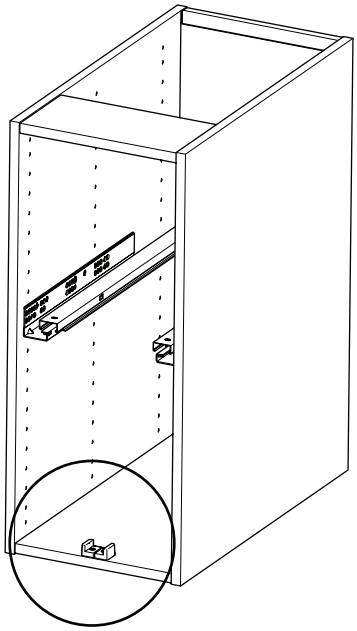

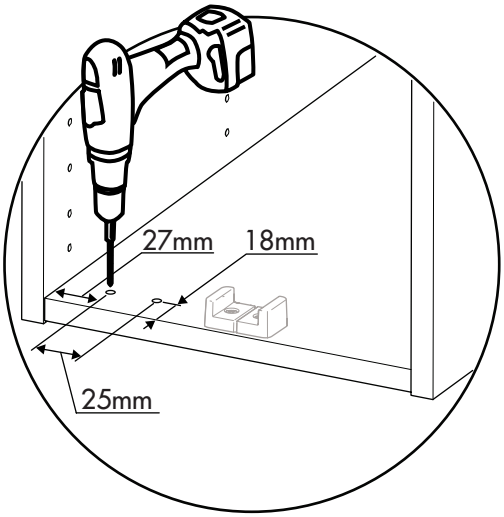
27mm
18mm
25mm

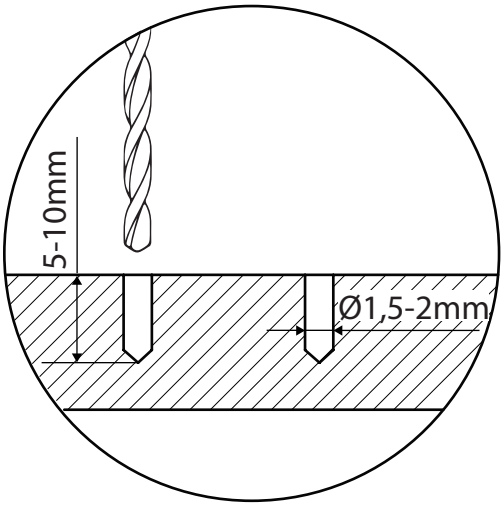
5-10mm
Ø1,5-2mm

4

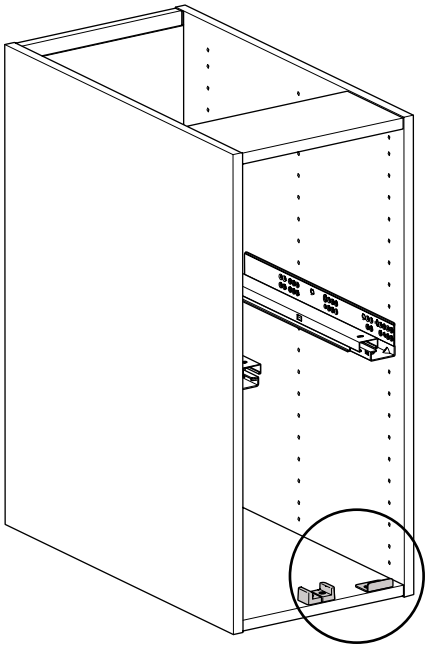

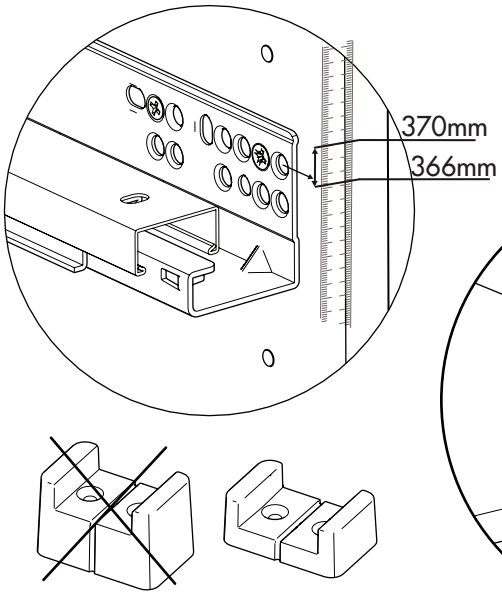

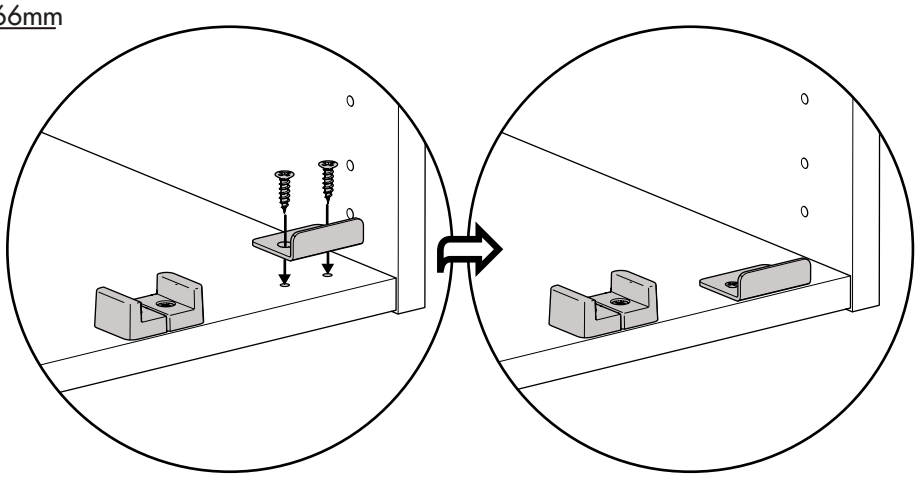

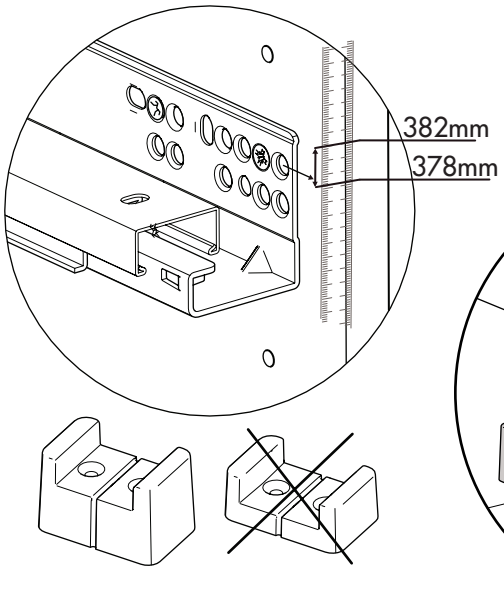

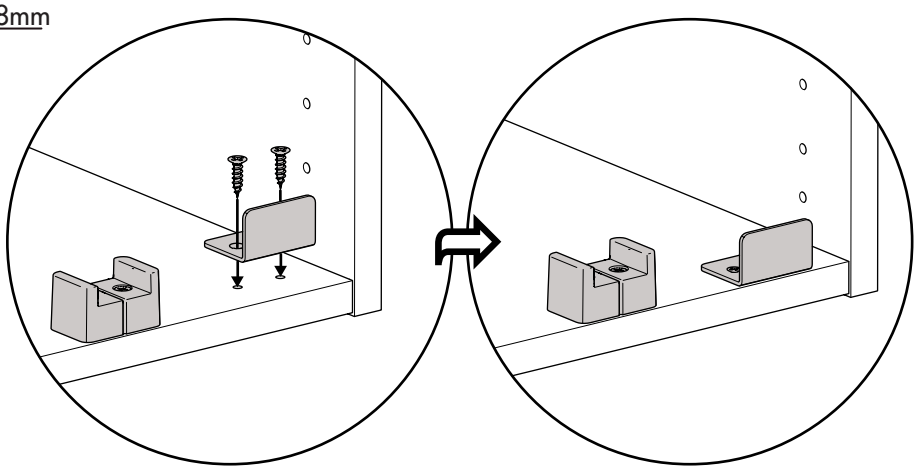

5

Left side

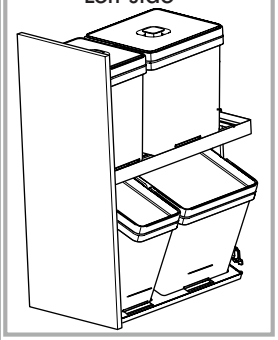

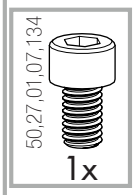

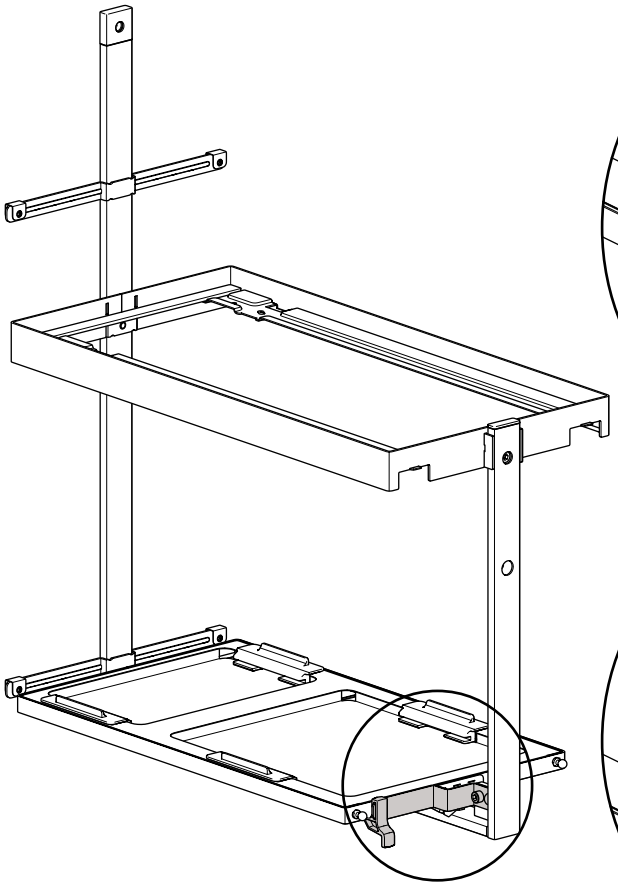

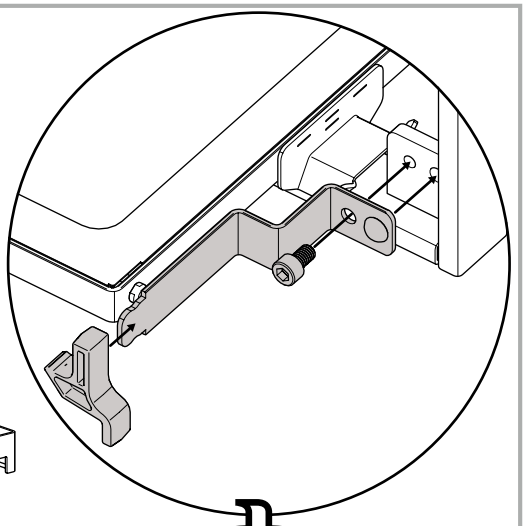

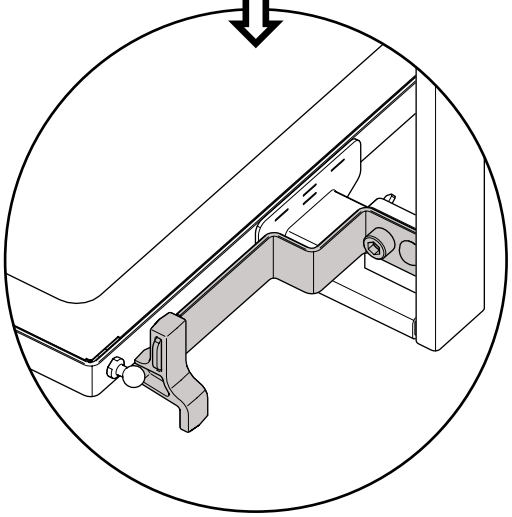

Right side

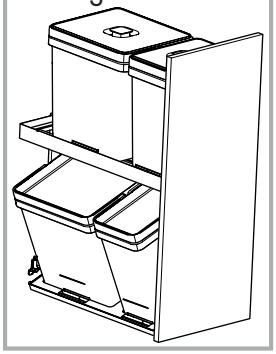



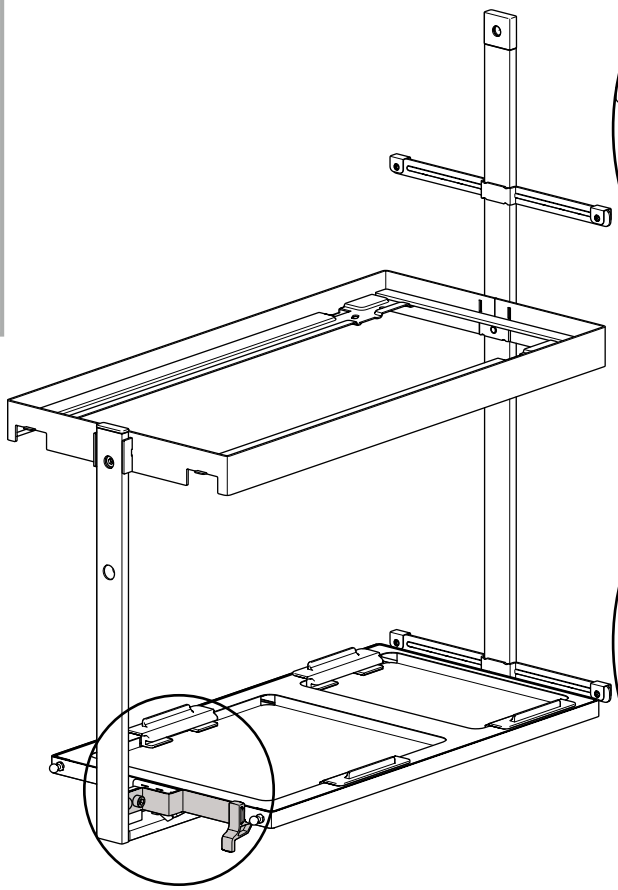

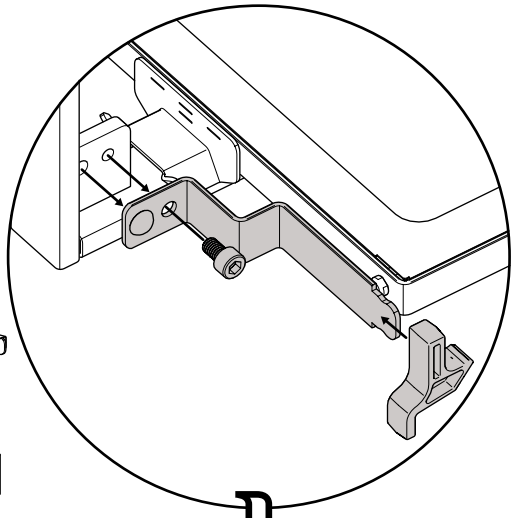

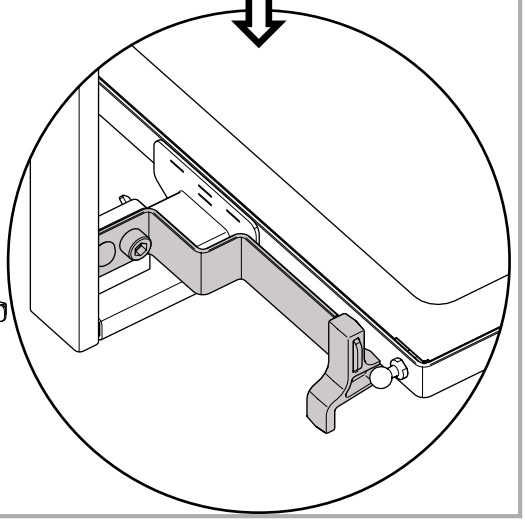

6

Left side

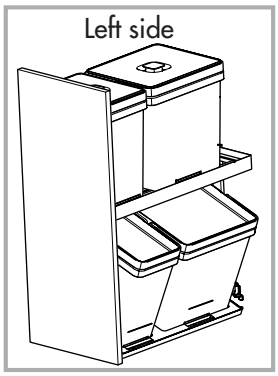

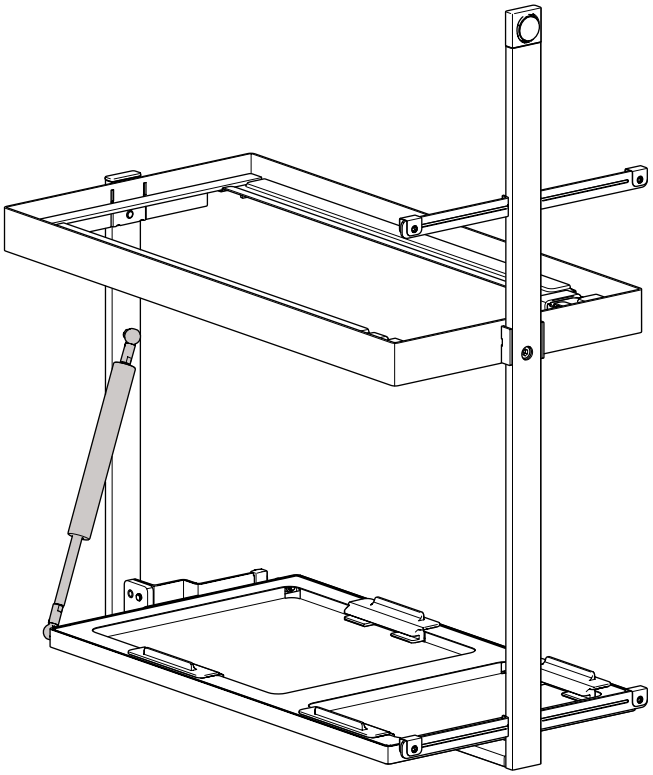

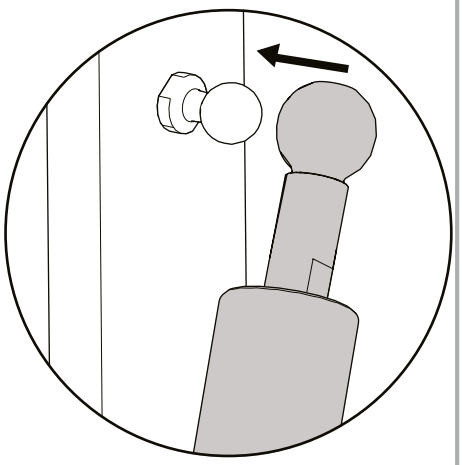

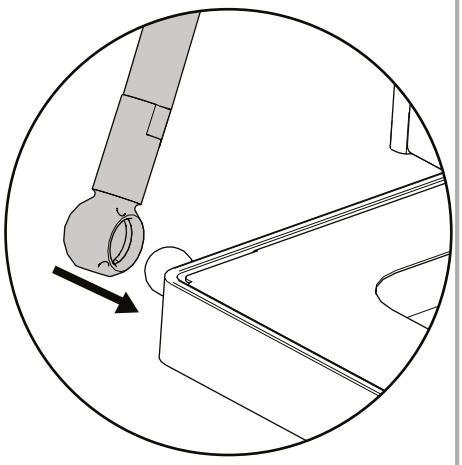

Right side

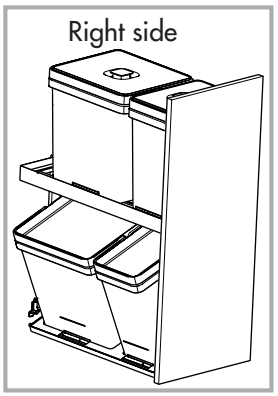

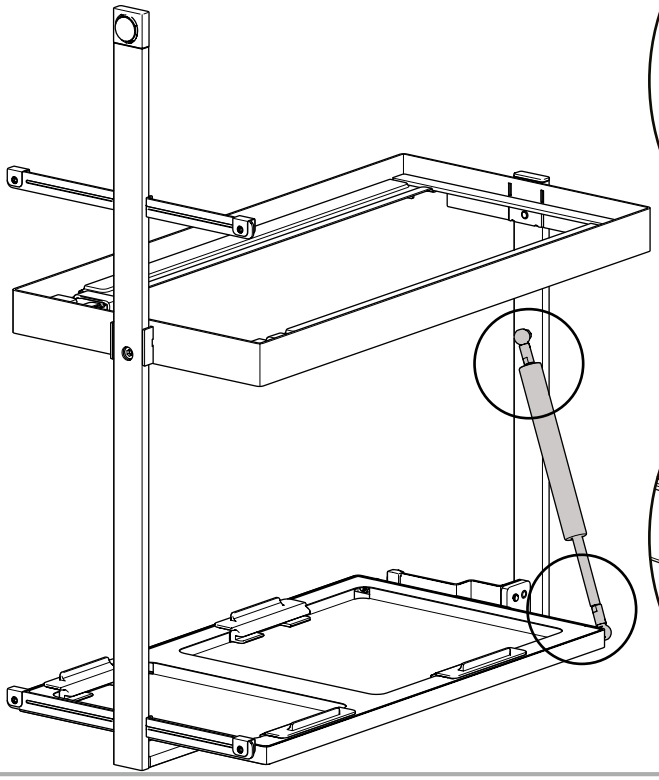

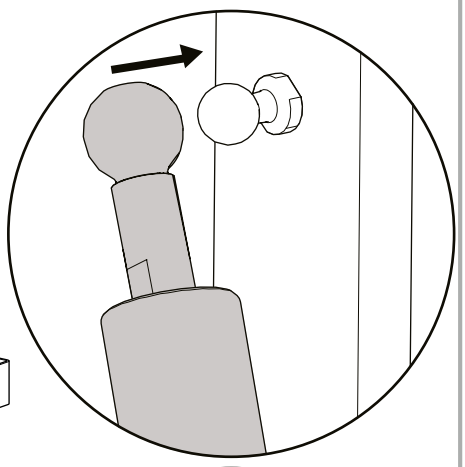

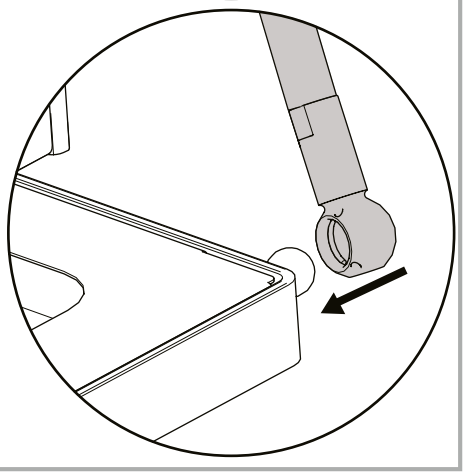

7

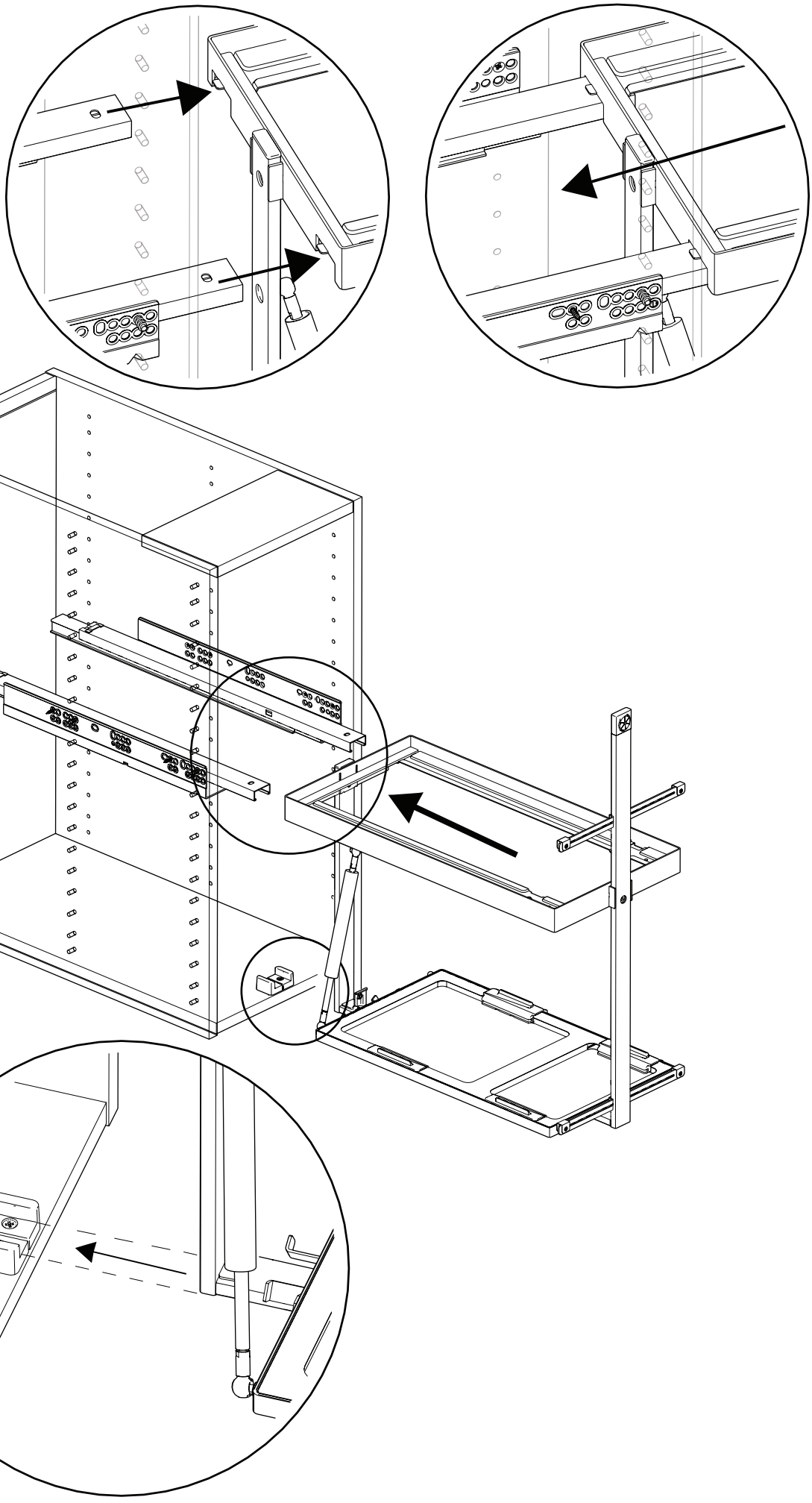

8

(i)

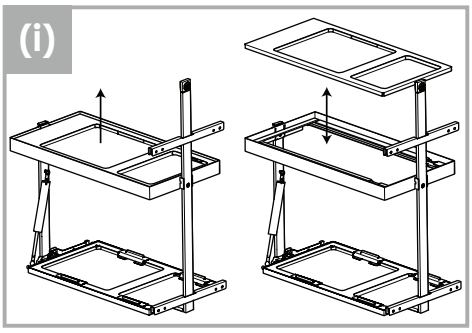

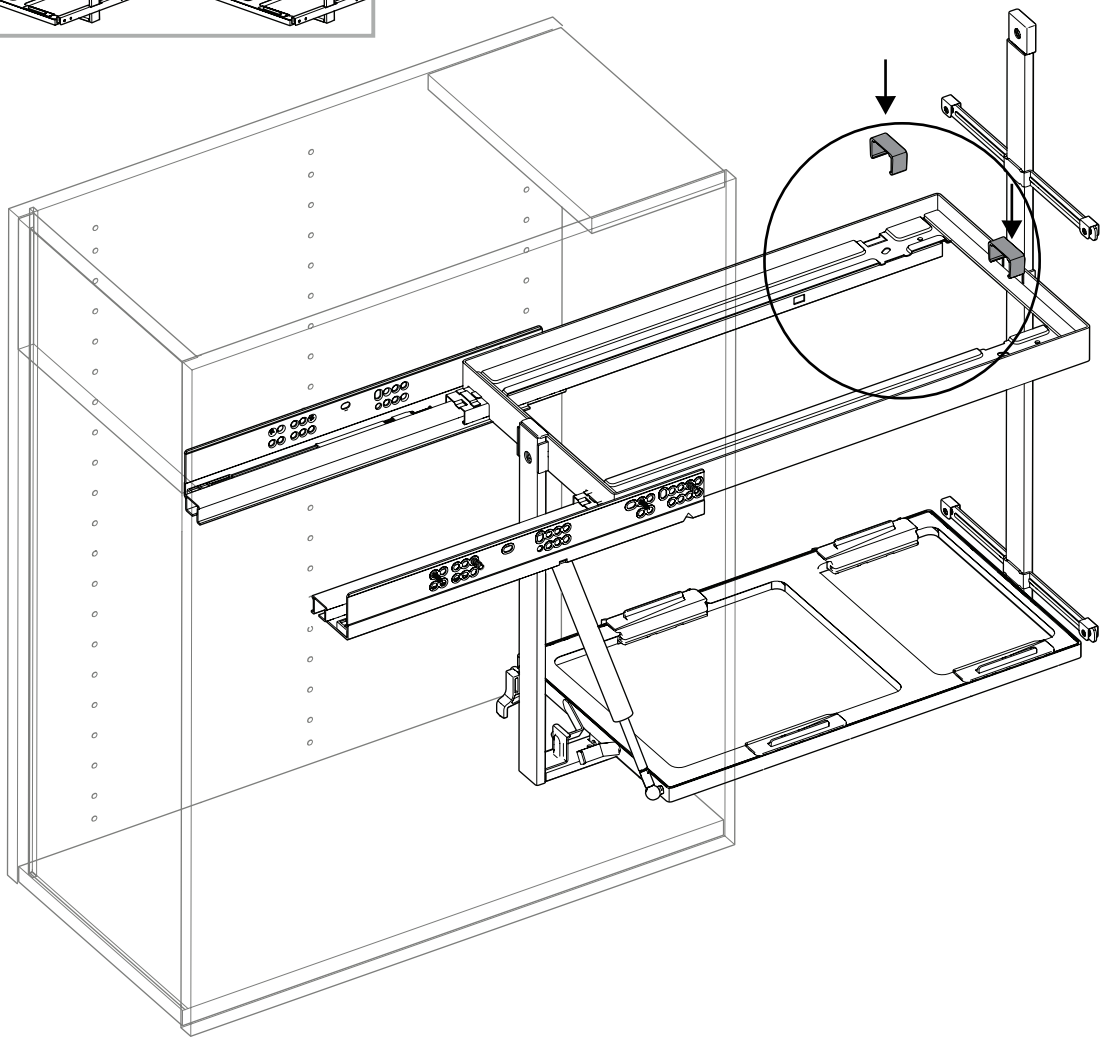

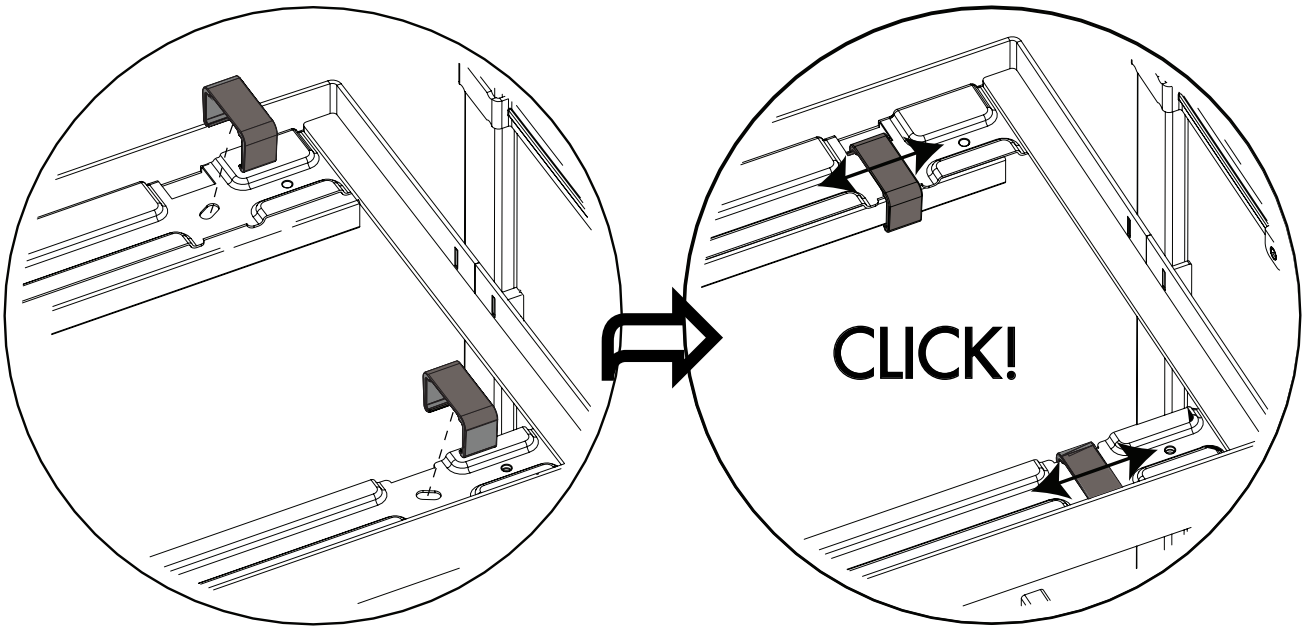

9

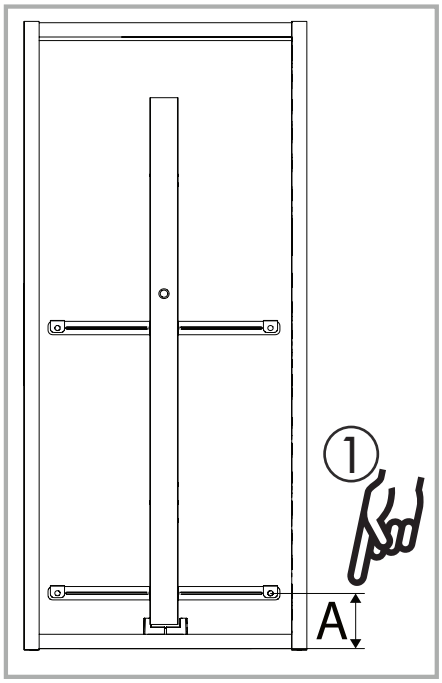

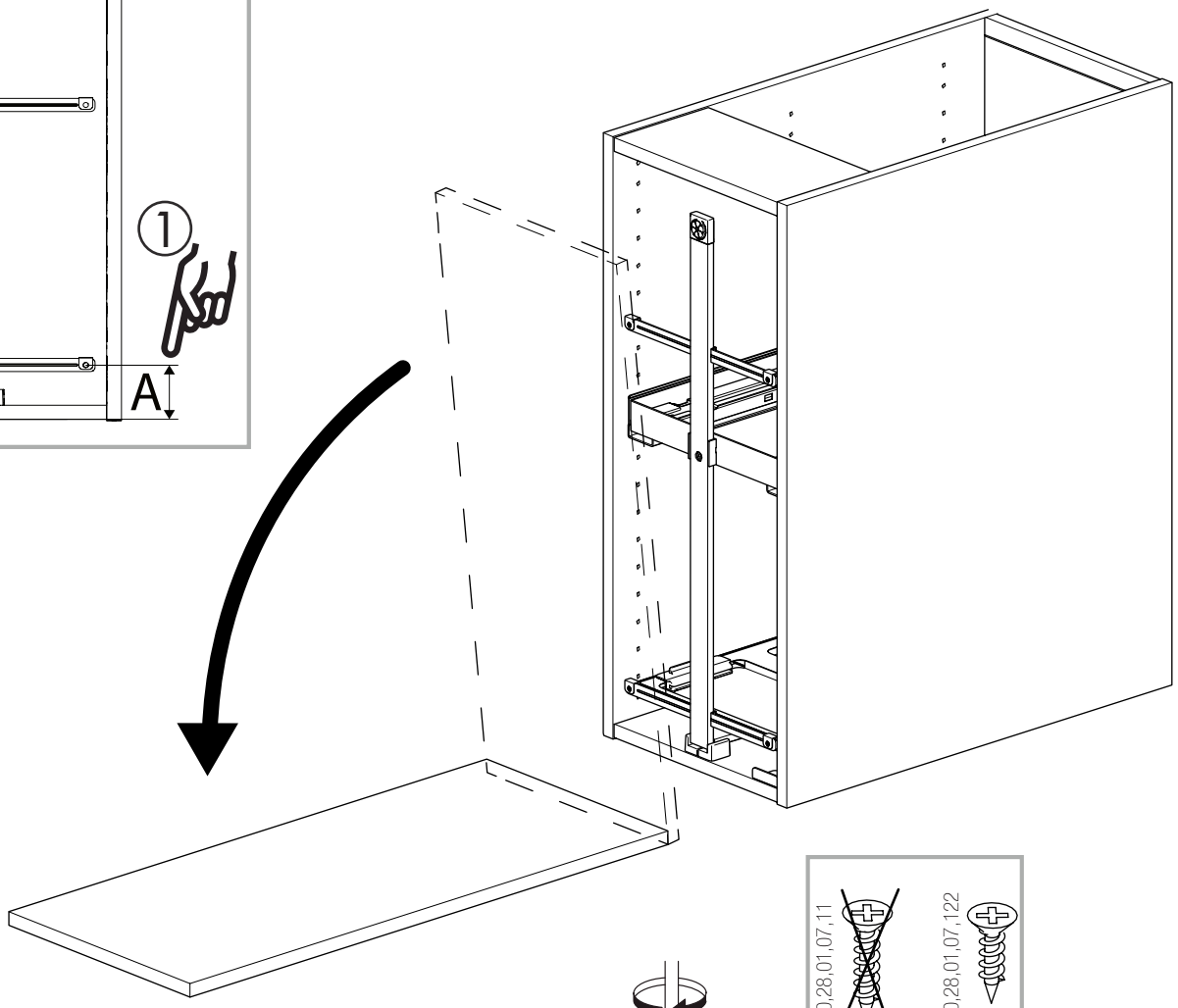

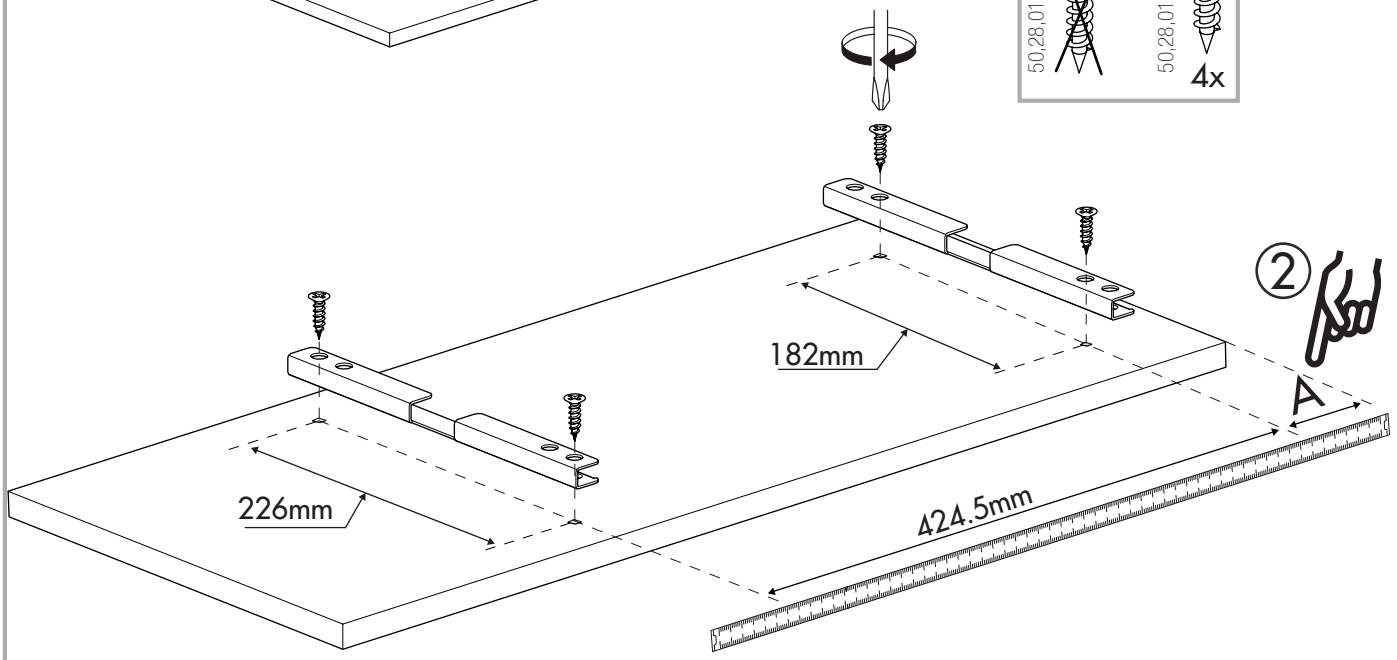

10

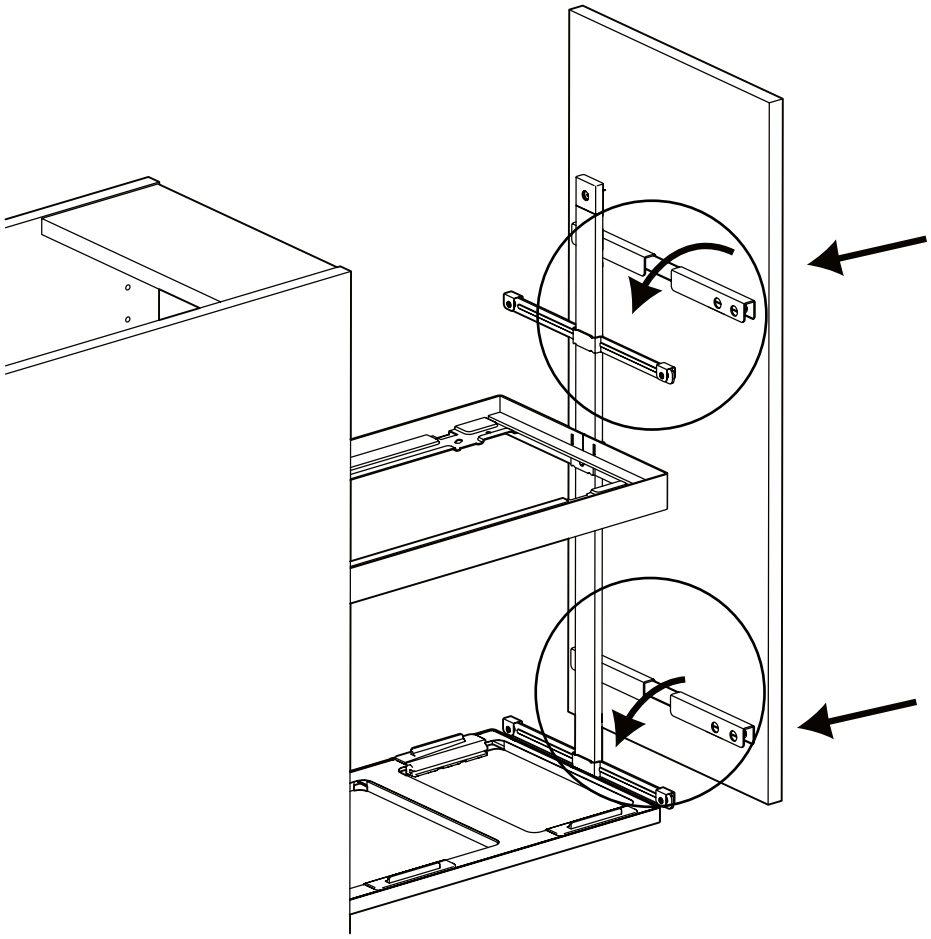

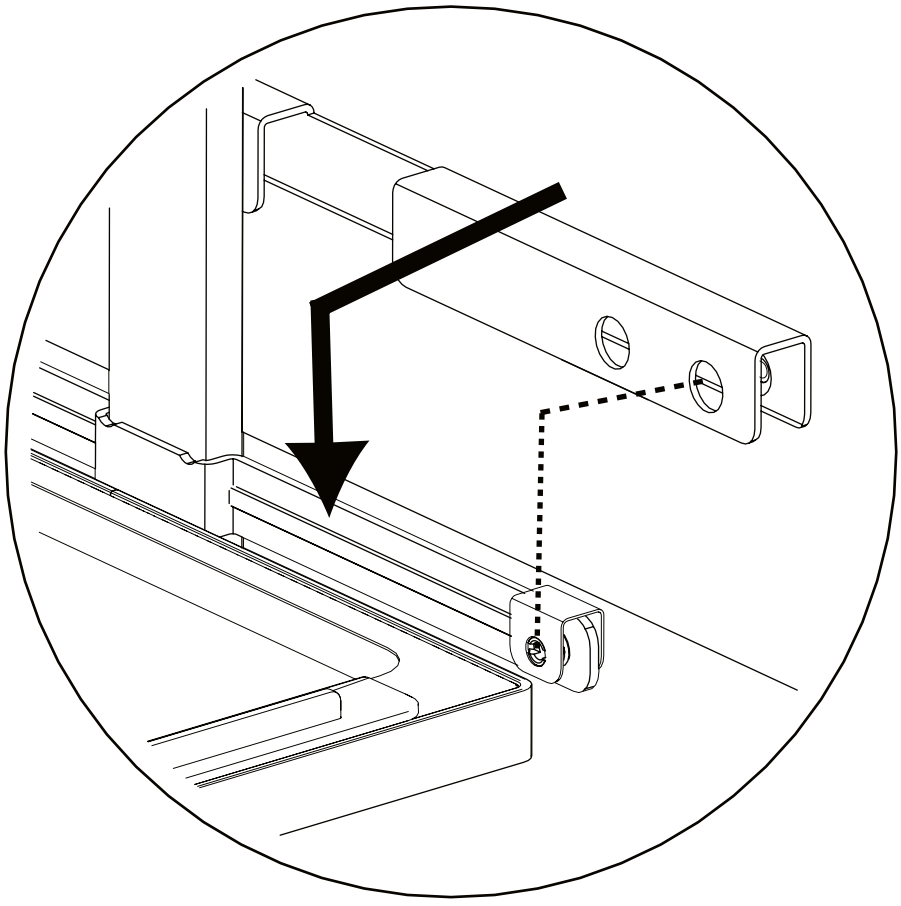

i

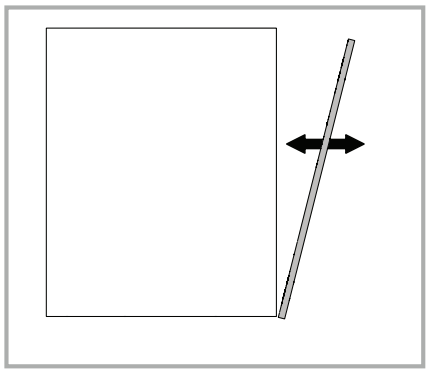

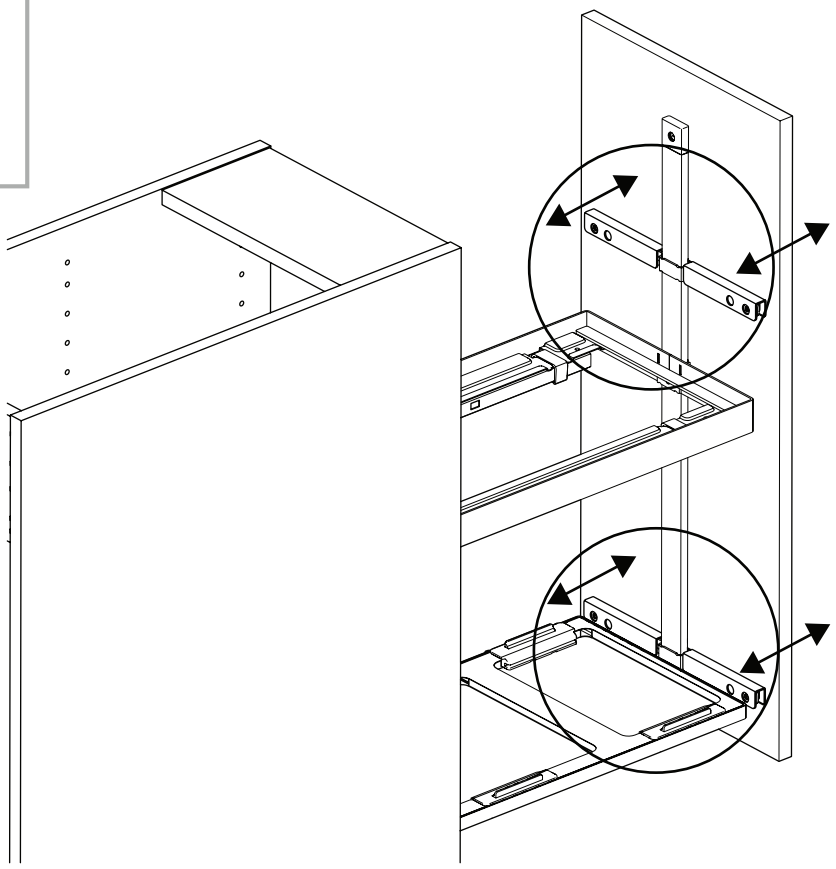

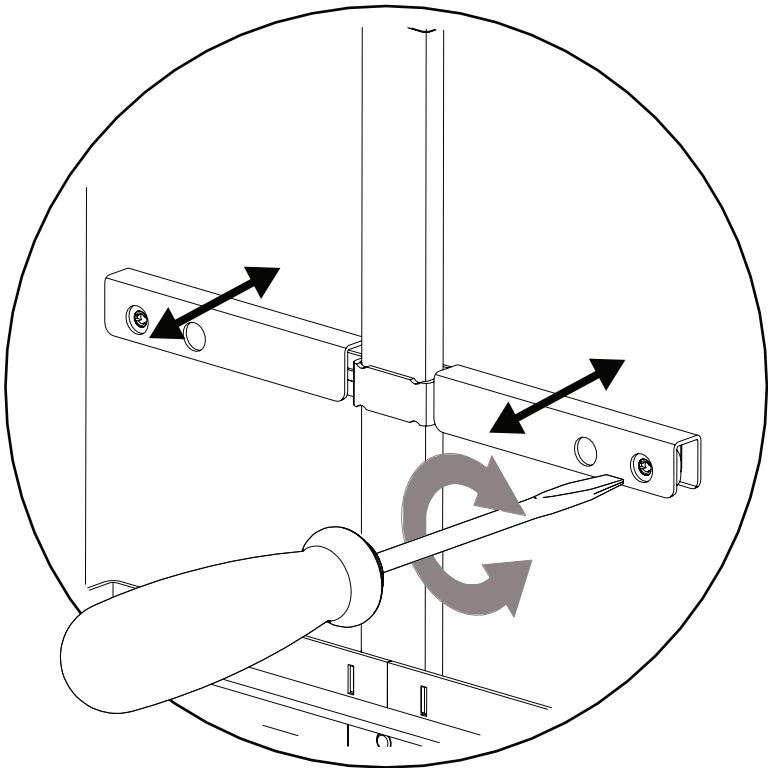

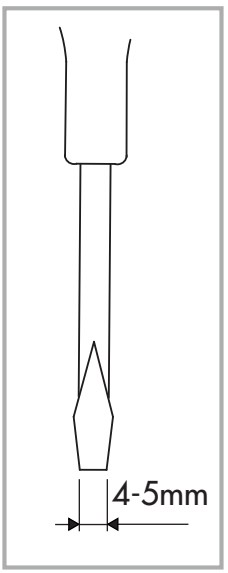

11

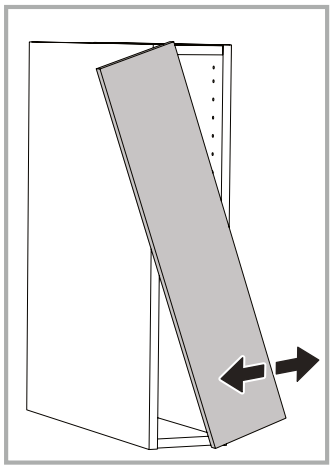

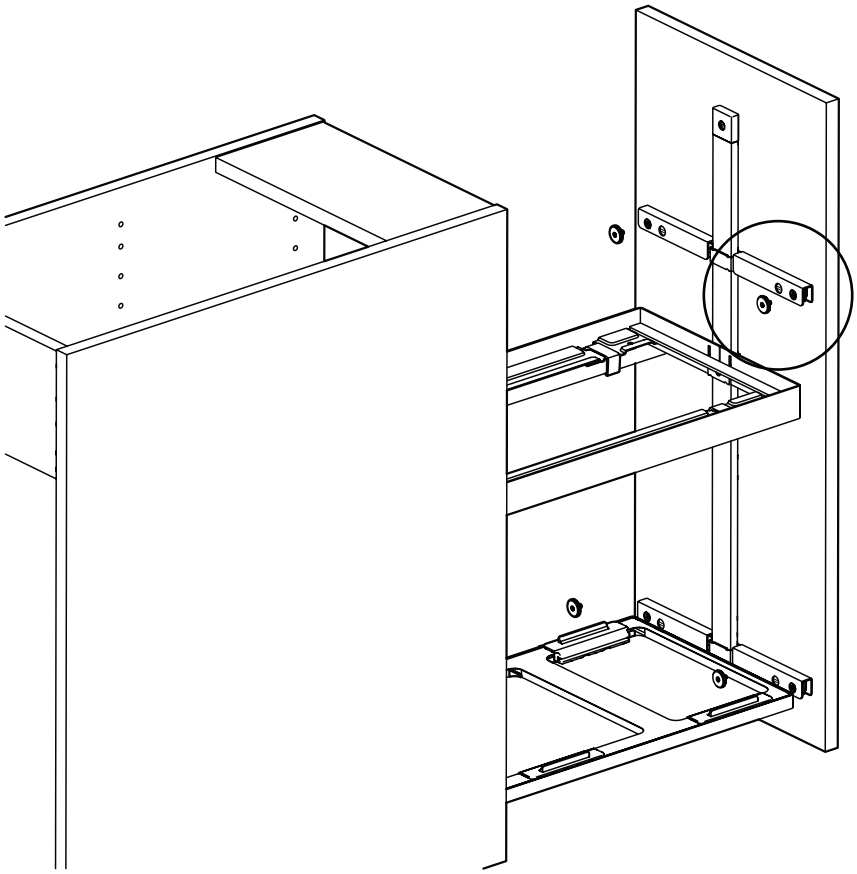

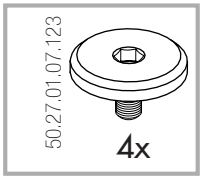

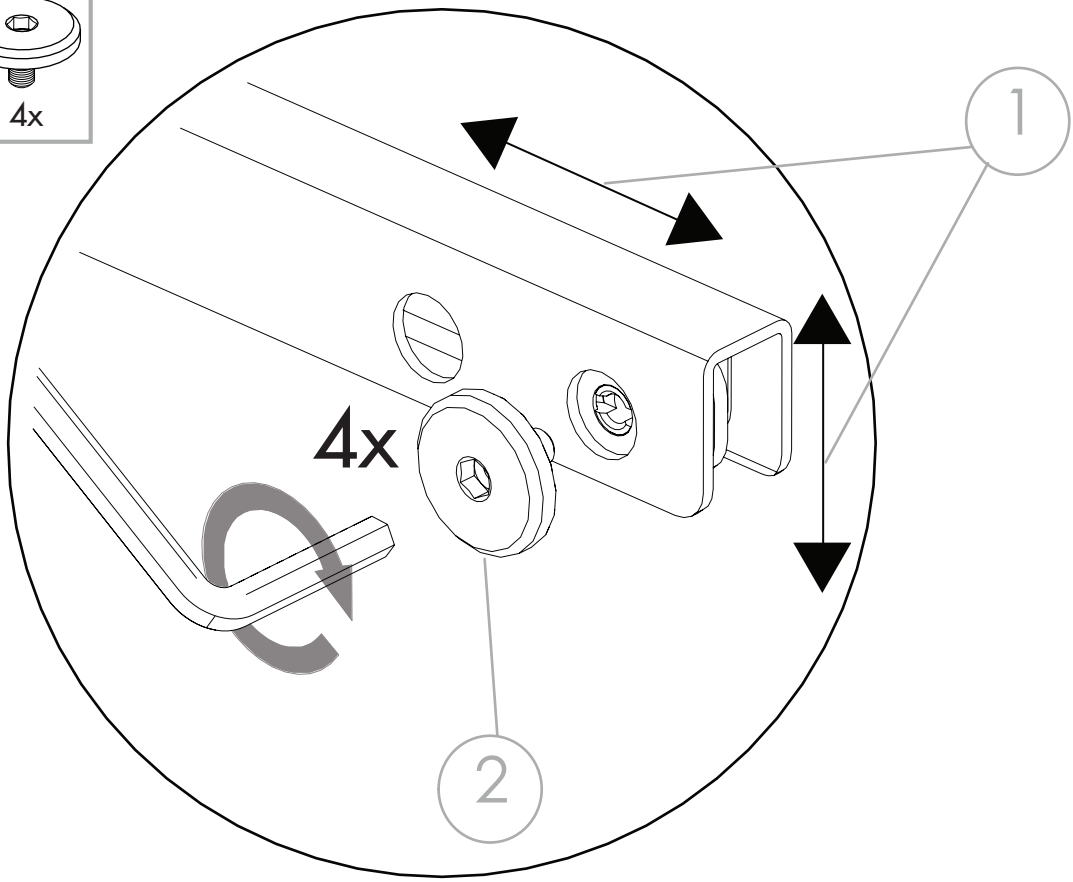

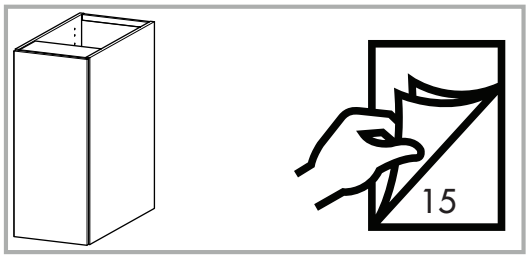

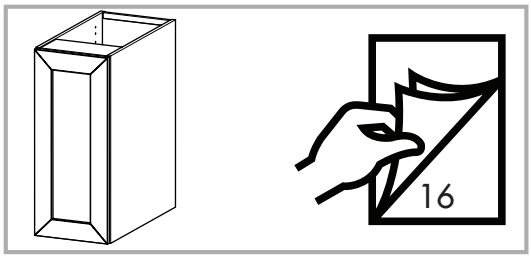

12

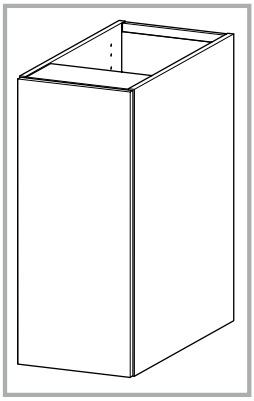

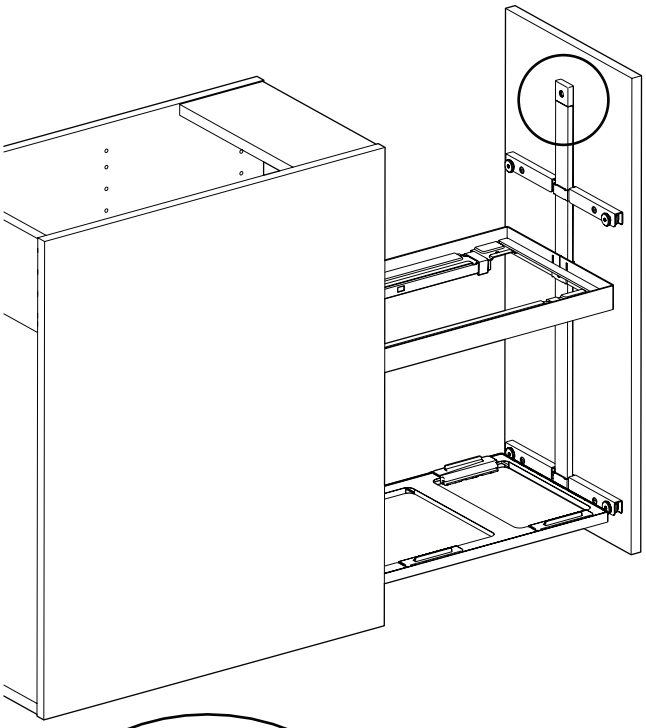

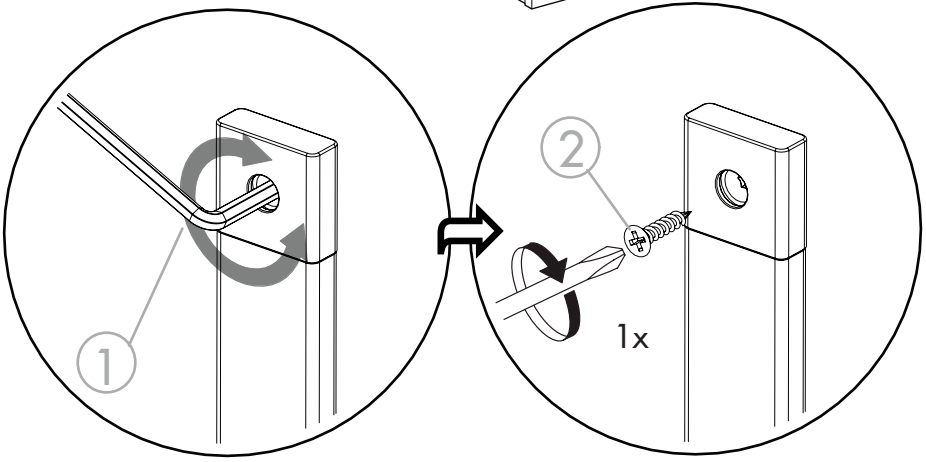



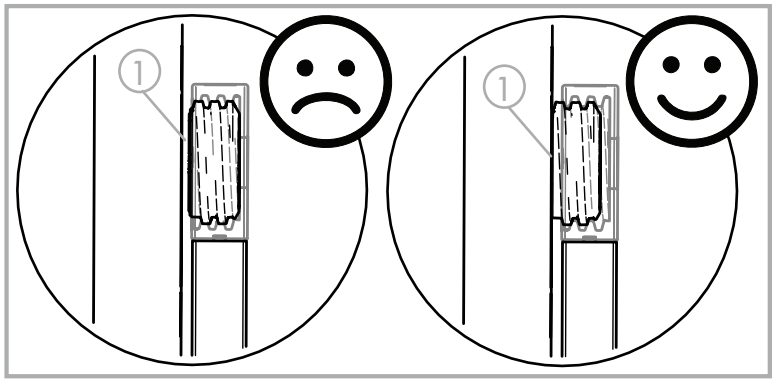

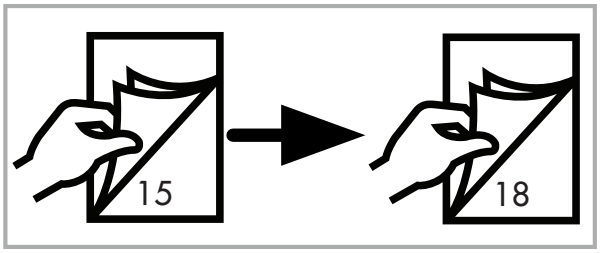

12

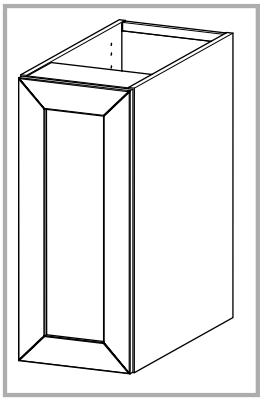

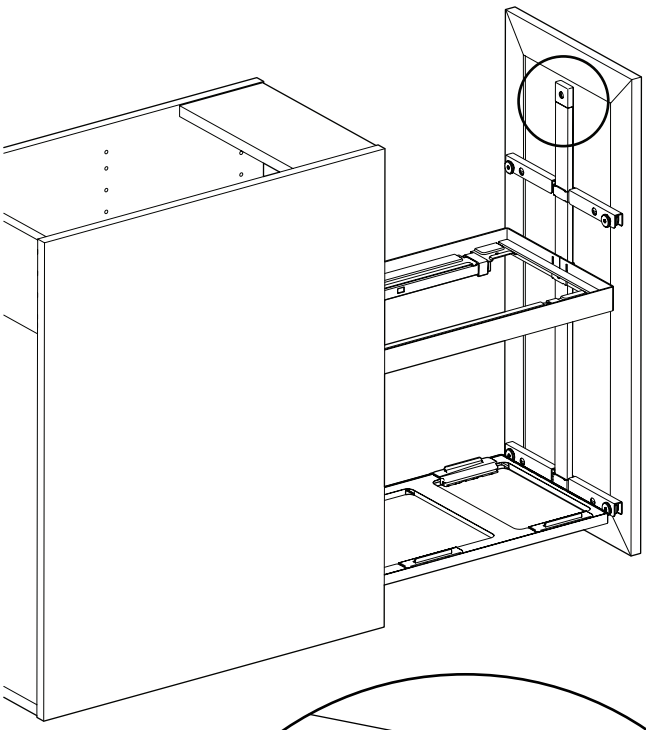

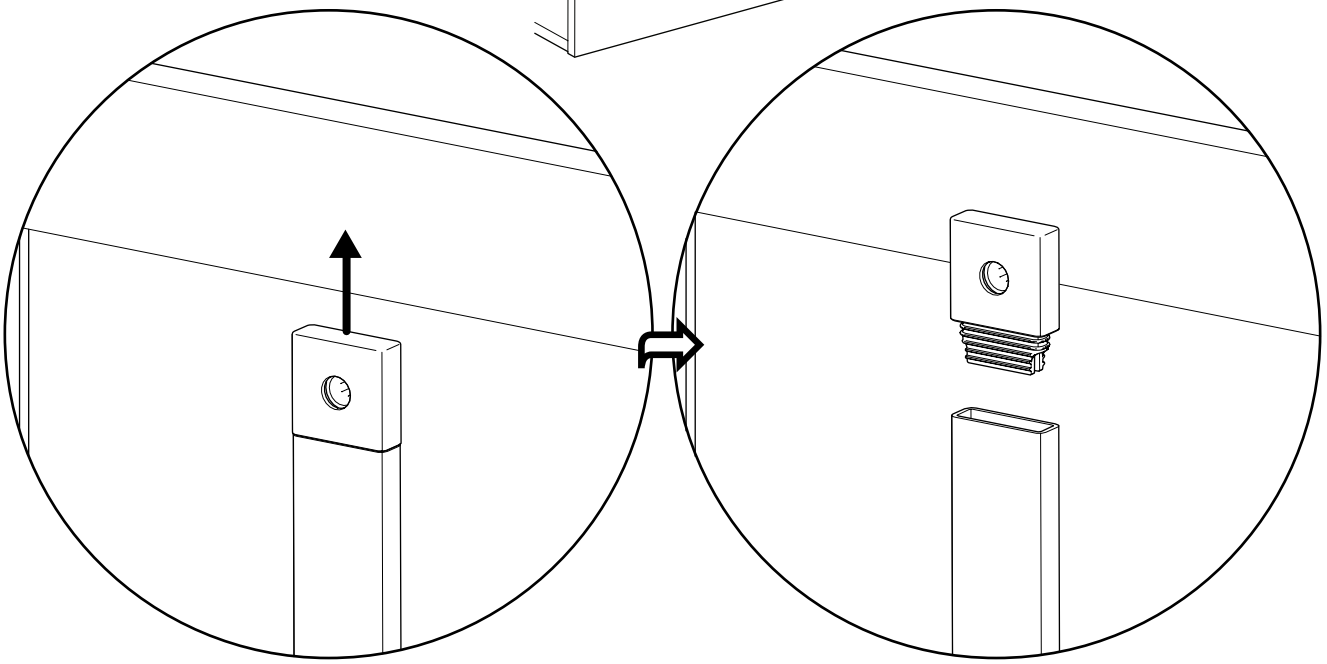

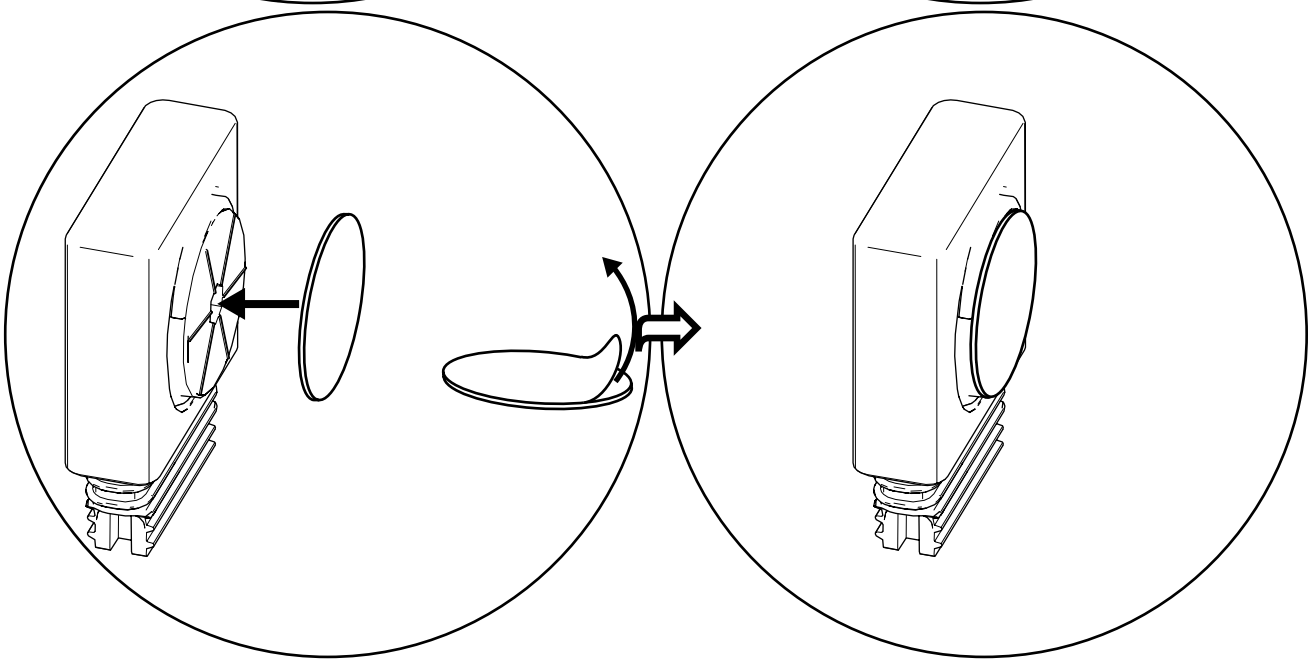

12

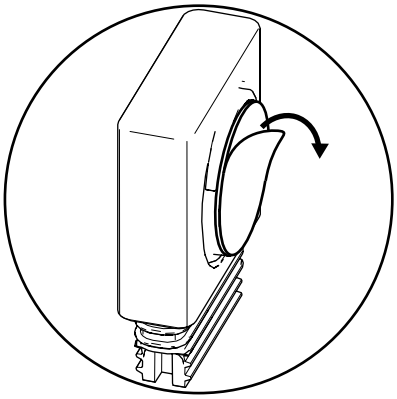

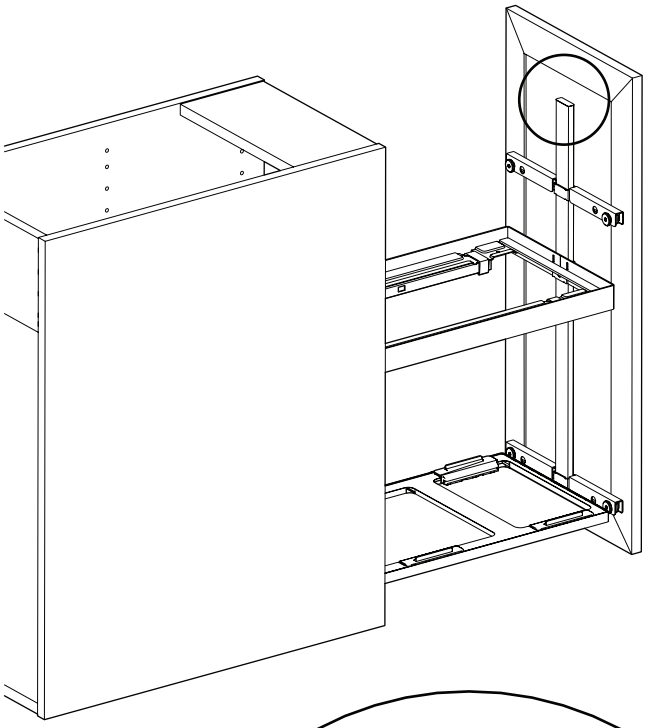

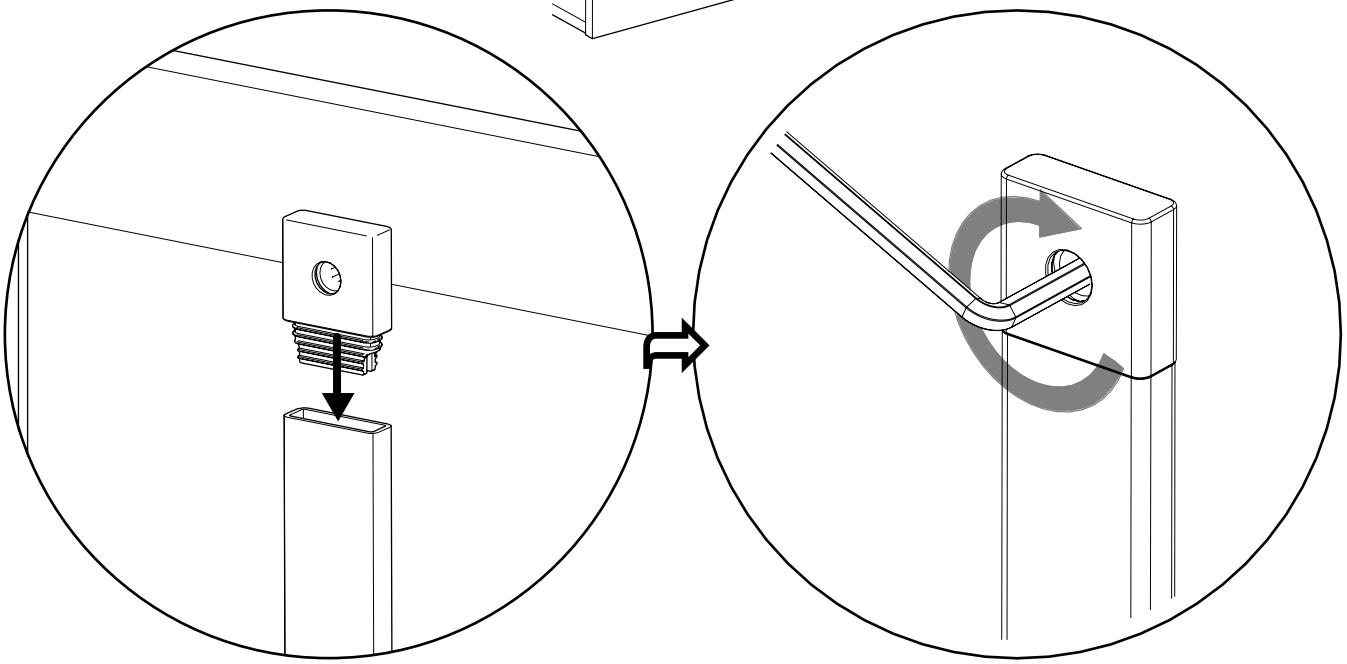

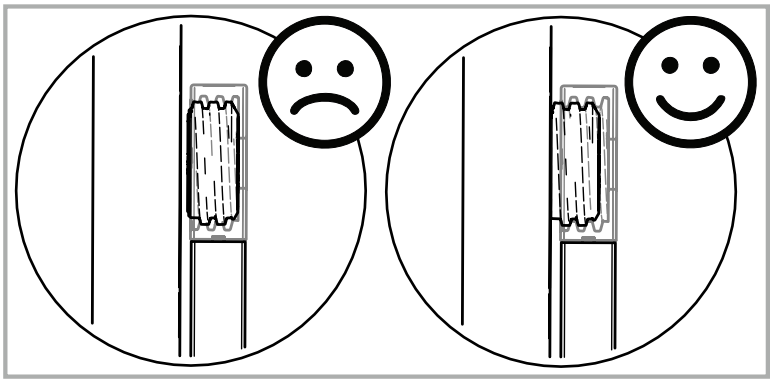

13

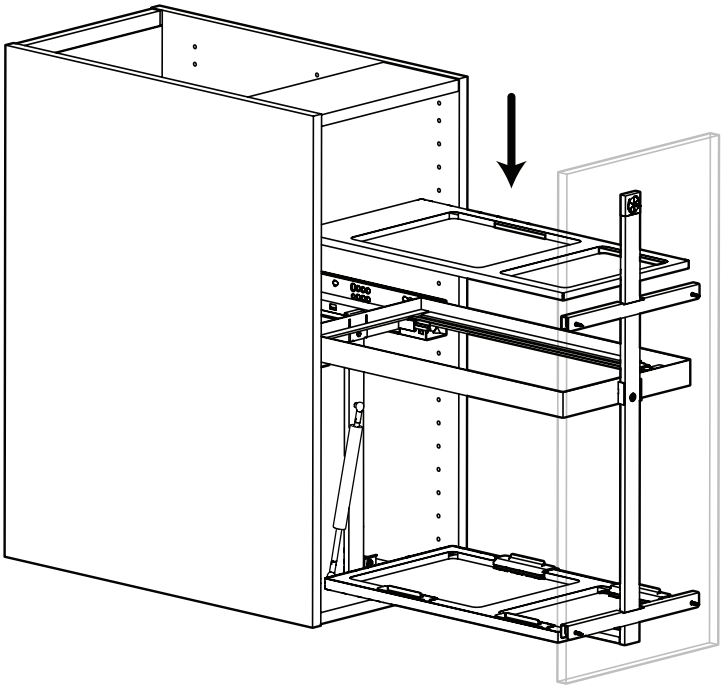

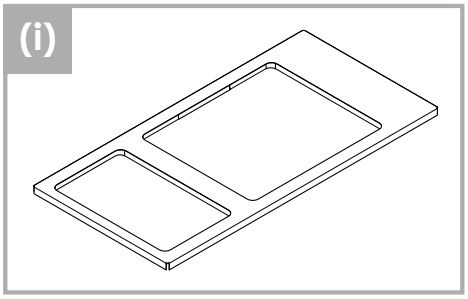

14

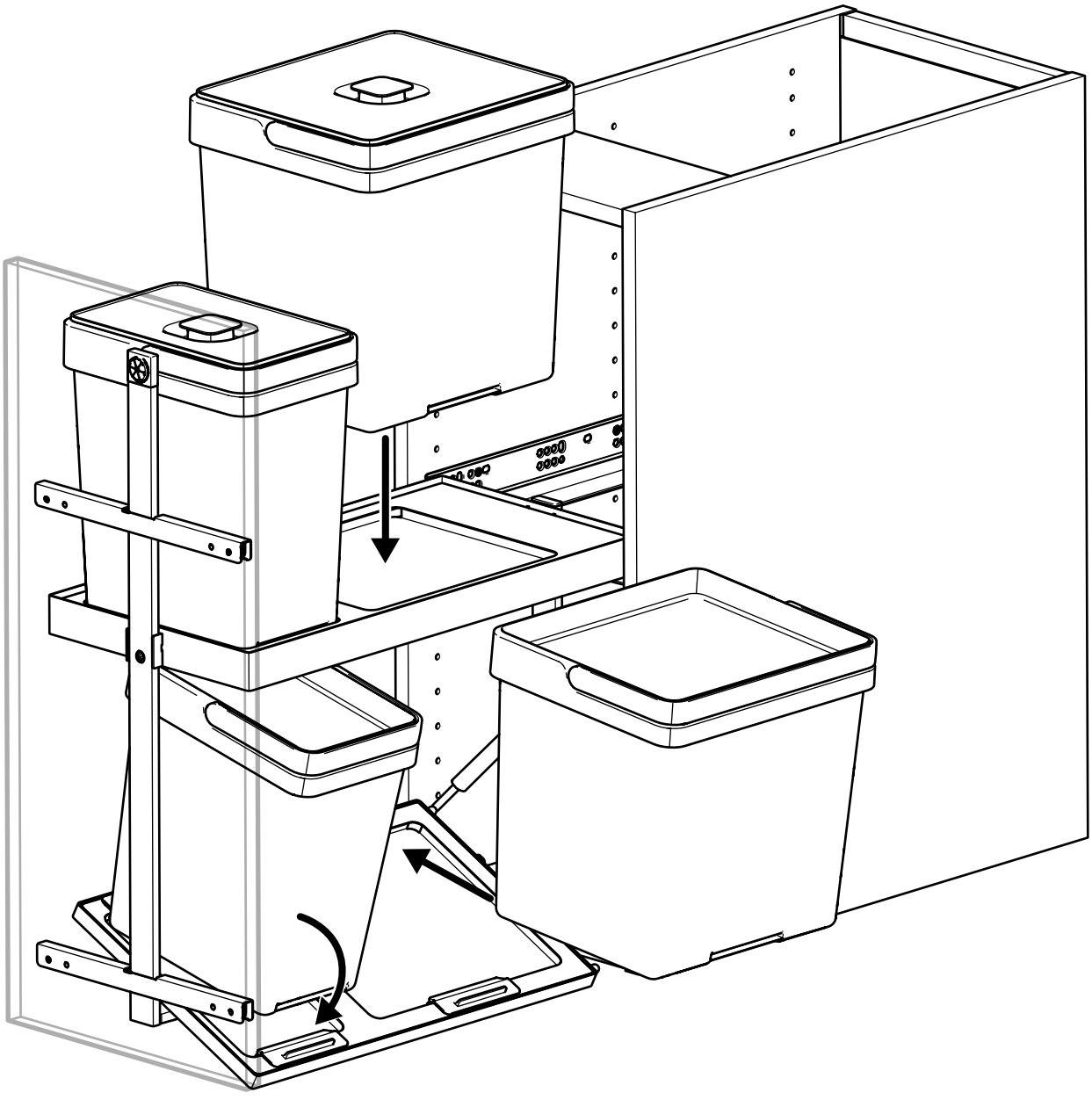

(i)

